LODI UNIFIED SCHOOL DISTRICT

2020 Paving Project(s) – Phase II

PROJECT NUMBER: 0913-8213
DSA #:02-118117
Creekside Elementary School

ADDENDUM NO. 1

March 13, 2020

Owner:	Lodi Unified School District 1305 E. Vine Street Lodi, CA 95240
Engineer:	Warren Consulting Engineers, Inc. 1117 Windfield Way El Dorado Hill, CA 95762
Project Manager:	Capital Program Management, Inc. 1851 Heritage Lane, Suite 210 Sacramento, CA 95815

This Addendum has been prepared to clarify, modify, delete, or add to the drawings and/or specifications for the above referenced project, and revisions to items listed here shall supersede description thereof prior to the above stated date. All conditions not specifically referenced here shall remain the same. It is the obligation of the Prime Contractor to make subcontractors aware of any items herein that may affect submitted bids.

Acknowledge receipt of this addendum by inserting its number and date in the bidding documents. Failure to do so may subject bidder to disqualification.

All addenda items refer to the plans and specifications unless specifically noted otherwise.

TOTAL PAGES IN THIS ADDENDUM (including attachments): 34

LODI UNIFIED SCHOOL DISTRICT

2020 Paving Project(s) – Phase II

PROJECT NUMBER: 0913-8213
DSA #:02-118117
Creekside Elementary School

ADDENDUM NO. 1

PART A - BIDDING AND CONTRACT REQUIREMENTS

1.1 The bid date has not changed. Bids are due Wednesday, March 18, 2020 by 2:00:00 p.m. at the District Office, 1305 E. Vine Street Lodi California 95240.

1.2 Refer to Document 00 41 13 – Bid Form and Proposal
1.2.1 **Replace** in its entirety with the attached "Bid Form and Proposal" Document 00 41 13, Addendum No. 1.

1.3 Refer to Document 00 52 13 – Agreement
1.3.1 **Replace** in its entirety with the attached "Agreement" Document 00 52 13, Addendum No. 1.

1.4 **Add** Document 00 57 00 – Escrow Agreement in Lieu of Retention, Addendum No. 1.

1.5 Refer to Document 01 21 00 – Allowance
1.5.1 **Replace** in its entirety with the attached "Allowance" Document 01 21 00, Addendum No. 1.

PART B - TECHNICAL REQUIREMENTS

1.3 N/A

PART C - DRAWINGS

1.4 Creekside Elementary School - Project #0913-8213 – DSA #02-118117. Refer to Drawing Sheet C2.1 Grading Plan. **Replace** in its entirety with Drawing Sheet C2.1 Grading Plan, dated 03/12/2020.

1.5 Creekside Elementary School - Project #0913-8213 – DSA #02-118117. Refer to Drawing Sheet C3.1 Paving Plan. **Replace** in its entirety with Drawing Sheet C3.1 Paving Plan, dated 03/12/2020.

LODI UNIFIED SCHOOL DISTRICT

2020 Paving Project(s) – Phase II

PROJECT NUMBER: 0913-8213
DSA #:02-118117
Creekside Elementary School

ADDENDUM NO. 1

PART D – RESPONSES TO CONTRACTOR QUESTIONS

1.6 **Question:** There appears to be two valley gutters in the front parking lot running east to west but there is no callout or detail. Please advise if this is concrete or asphalt.

Response: The valley gutters are called out on replaced Addendum Sheet C2.1 and C3.1.

1.7 **Question:** Will we be replacing the curbs at the ADA ramps. There is no callout for demo and unclear if new curbs are going in.

Response: See Addendum Sheet C3.1.

1.8 **Question:** C3.1 note 18 appears to point to new fence replacing the demo'd fence in the playground but there is no note 18. Please advise.

Response: See Addendum Sheet C3.1.

1.9 **Question:** The limits of the concrete ramp are unclear on the grading sheet compared to the civil sheet. Please advise which will govern.

Response: See Addendum Sheet C3.1.

1.10 **Question:** Please provide a detail for the new light pole base and footing for the relocated street light.

Response: See detail 4/C2.1 in Addendum No. 1

1.11 **Question:** Will there be any kids in summer school?

Response: No

1.12 **Question:** Will a field office be required as stated in spec section 01 50 00-2?

Response: No

1.13 **Question:** Will a job sign be required as stated in spec section 01 50 00-6?

Response: No

1.14 **Question:** Will the district require mapping from the utility locator as stated in spec section 31 00 00?

Response: Yes, per spec. 31 00 00, 1.10, B, 8.

LODI UNIFIED SCHOOL DISTRICT

2020 Paving Project(s) – Phase II

PROJECT NUMBER: 0913-8213
DSA #:02-118117
Creekside Elementary School

ADDENDUM NO. 1

1.15 **Question:** Please provide a detail for the Contech units.

Response: See Contech Units sizing submittal attached to this Addendum No. 1.

1.16 **Question:** The soil treatment spec will only be used in the case of unsuitable soil and charged to the allowance, correct?

Response: Yes

1.17 **Question:** Will a header or curb be required at the planter in the playground?

Response: A header will be required.

PART E – List of Attachments

1.18 Pre-bid Conference & Site Visit Agenda. (1 Page)
1.19 Pre-Bid Conference & Site Visit - Sign-In Sheet (2 Pages)
1.20 Document 00 41 13 – Bid Form and Proposal (5 Pages)
1.21 Document 00 52 13 – Agreement (5 Pages)
1.22 Document 00 57 00 – Escrow Agreement in Lieu of Retention (3 Pages)
1.23 Document 01 21 00 – Allowance (1 Page)
1.24 Drawing Sheet C2.1 Grading Plan, dated 03/12/2020 (1 Page)
1.25 Drawing Sheet C3.1 Paving Plan, dated 03/12/2020 (1 Page)
1.26 Contech Units sizing submittal, dated 01/17/2020 (11 Page)

End of Addendum

Lodi Unified School District
2020 Paving Project(s)
Creekside ES Paving Project
Project No. 0913-8213

PRE-BID CONFERENCE & SITE VISIT AGENDA

Date: Thursday, February 27, 2020 **Time:** 3:00 p.m.
Schools: Creekside Elementary School
Bid Date: **Wednesday, March 18, 2020 by 2:00:00 p.m. at the LUSD Office**

I. Meeting Called to Order
II. Introduction of Project Team
A. District Representative, Vicki Brum, Katie Madzier, & Joe Patty Planning & Facilities
B. Capital Program Management, Craig Dooling and Dany Mendez
C. Tom Fassbender, Warren Consulting Engineering, Inc., Civil Engineer
III. Bidding Documents: Available from District **https://www.lodiusd.net/district/departments/business-services/facilities-and-planning/fp-projects**. Also available at Builder's Exchange of Sac and Stockton and Valley Builder's Exchange.
IV. Contracting Format: (1) Prime Contract
V. Scope of Work Descriptions: Document 01 11 00 Part 1.02 Summary of Work and Drawings
VI. Engineer's Estimated Construction Budget: Creekside El ($813,000.00)
VII. Bidding and Contract Award Requirements:
A. License requirement(s): A or B
B. Bid Bond or Certified Check, 10% of bid
C. Prevailing Wages - certified payrolls, payroll records and other documents shall be required along with your progress billings: **www.dir.ca.gov/dlsr/DPreWageDetermination.htm**
D. DIR Registration of Contractor & Subcontractors (See General Conditions, Section 0072 13)
E. Disabled Veterans Business Enterprise (DVBE – Section 00 45 46.02)
F. Bond and Insurance Requirements (See General Conditions, Section 00 72 13)
G. Bid Form (See Bid Form, Section 00 41 13):
1. Completed Forms
2. No Iran Contra Document required
3. No faxes, phone or email bids
4. Bids good for 90 days
H. Pre-Qualified Bid Requirements - https://pqbids.com/lodi/
VIII. Inspection Procedures: DSA Project Inspector: Jim Girard
IX. Project Schedule: See Document 00 01 20 List of Schedules. Start date of Construction is June 1, 2020 and completion date is July 31, 2020.
X. Department of Justice (DOJ) Clearance, Badges and Security: District Protocols. DOJ clearance for Supervisors and Visitor Badges for work crew.
XI. Site Information:
A. Contact: Dany Mendez C: 916-779-5921
B. Site access, temporary facilities, staging areas and parking
C. Conduct on school premises: No dialogue or contact with students, no smoking or tobacco and all employees on site are to conduct themselves professionally.
D. Contractor's working hours: 7:00 am - 3:30 pm
E. Contractor's supervision: The designated Superintendent must be present at all times when subcontractors or self-performance work is taking place.
F. Tribal monitoring for cultural artifacts – (See Special Conditions, 00 73 13)
XII. Owner Meetings: Weekly. At site and room TBD
XIII. Questions
XIV. Adjournment

Important note: Responses to inquiries and discussions occurring at this pre-bid walk-through shall in no way change or modify the bid documents. The bid documents will be affected only by addenda issued prior to the bid date.

Send written inquiries by EOB March 06, 2020 to: Dany Mendez: danym@capitalpm.com and Craig Dooling: craigd@capitalpm.com.

Lodi Unified School District
PRE-BID CONFERENCE AND SITE VISIT SIGN-IN SHEET FOR
Project No. 0913-8213
Creekside ES Paving Project
Thursday, February 27, 2020
3:00 PM

Company Name & Representative Name	Company Street Address	Phone #	E-Mail	Initials
McGuire and Hester Hugo Gutierrez	1016 N. Market St SAC CA 95834	916.372.8910	Sacestimating@mcguireandhester.com	HG.
McFadden Construction Dustin Ketterling	7207 Murray Dr. Stockton CA 95210	209 478 7407	Dustin@mcfaddenconstruction.com	KE
Western Engineering Casey McKenzie	3171 Rippey Rd Loomis, CA 95650	916-316-0229	cmckenzie@westeng.com	CM
George Reed Inc Tallon Dotinga	140 Empire Ave Modesto, CA 95354	(209) 497-1475	gmo contracting@georgereed.com	TJD
Tom Mayo Const. Thomas Mayo	4735 E Fremont St. Stockton CA, 95215	(209) 649-8617	Thomas@tommayo.net	TM
BRCO CONSTRUCTORS, INC. Alyssa Countryman	3650 Cincinnati Avenue Rocklin CA 95765	916-253-9373 916-[illegible]	ACOUNTRYMAN@GOBRCO.COM	AC
All-American Construction, Inc. Jordan Franco	2048 Paseo Rd Live Oak, CA 95953	530-617-5111	derrek@all-americanconstructioninc.com	[illegible]
McCuen Construction, Inc. Garrett Mendes	5269 Swetzer Rd., Loomis, CA 95650	916-652-7824	gmendes@mccueninc.com	GM

Lodi Unified School District
PRE-BID CONFERENCE AND SITE VISIT SIGN-IN SHEET FOR
Project No. 0913-8213
Creekside ES Paving Project

Thursday, February 27, 2020
3:00 PM

Company Name & Representative Name	Company Street Address	Phone #	E-Mail	Initials
United Pavement Maintenance Greg Drake	7017 Hughson Ave hughson ck	(209) 448-1321	Greg@asphaltpavingpros.net	GD
Pro Builders Mike Ross	7030 Drywood wy 95662	916-225-0373	sebastian@Sacprobuilders.com	MR
CENTRAL VALLEY ASPHALT COURTNEY WILSON	23494 RD 196 LINDSAY, CA 93247	559-562-7802	chelseacva@ocsnet.net	CW

DOCUMENT 00 41 13

BID FORM AND PROPOSAL

To: Governing Board of the Lodi Unified School District ("District" or "Owner")

From: _____
(Proper Name of Bidder)

The undersigned declares that Bidder has read and understands the Contract Documents, including, without limitation, the Notice to Bidders and the Instructions to Bidders, and agrees and proposes to furnish all necessary labor, materials, and equipment to perform and furnish all work in accordance with the terms and conditions of the Contract Documents, including, without limitation, the Drawings and Specifications for the following project known as:

2020 Paving Project(s) – Phase II – Creekside Elementary School – Project #0913-8213

("Project" or "Contract") and will accept in full payment for that Work the following total lump sum amount, all taxes included in words and numbers:

Creekside Elementary School (Project #0913-8213) – Measure U Funding
Repaving hardcourt, scope as described in the plans and specifications.

_____ **Dollars** $ _____
Base Bid - U

Creekside Elementary School (Project #0913-8213) – Measure L Funding
Repaving front parking, new trash enclosure scope as described in the plans and specifications.

_____ **Dollars** $ _____
Base Bid - L

Creekside Elementary School (Project #0913-8213) – District Funding
Seal stripe, scope as described in the plans and specifications.

_____ **Dollars** $ _____
Base Bid - D

Creekside Elementary School (Project #0913-8213)
The sum of base bid U + L + D

_____ **Dollars**	$ _____
Total Base Bid	

Alternates: Not Used.

Allowance(s): The Bidder's Base Bid shall **NOT** include the following potential Allowance(s). The District will add some or all of the following Allowance(s) amount(s) to the successful bidder's Contract, at the District's discretion. Contractor shall be permitted to invoice for Work under an Allowance in the identical structure as a Change Order.

Allowance #1: Allowance for unforeseen conditions	$75,000.00

Allowance #2: Allowance for Soil Treatment	$100,000.00

END OF DOCUMENT

Additional Detail Regarding Calculation of Base Bid

1. **Unit Prices** (Not Used).

2. **Allowance**. In addition to the Bidder's Base Bid, an allowance for unforeseen, or other items will be included, see Bid Form. The above allowance(s) shall only be allocated for unforeseen, or other items relating to the Work. Contractor shall not bill for or be due any portion of this allowance unless the District has identified specific work, Contractor has submitted a price for that work or the District has proposed a price for that work, the District has accepted the cost for that work, and the District has prepared an Allowance Expenditure Directive incorporating that work. Contractor hereby authorizes the District to execute a unilateral deductive change order at or near the end of the Project for all or any portion of the allowance not allocated.

3. **OCIP.** Not used.

4. The undersigned has reviewed the Work outlined in the Contract Documents and fully understands the scope of Work required in this Proposal, understands the construction and project management function(s) is described in the Contract Documents, and that each Bidder who is awarded a contract shall be in fact a prime contractor, not a subcontractor, to the District, and agrees that its Proposal, if accepted by the District, will be the basis for the Bidder to enter into a contract with the District in accordance with the intent of the Contract Documents.

5. The undersigned has notified the District in writing of any discrepancies or omissions or of any doubt, questions, or ambiguities about the meaning of any of the Contract Documents, and has contacted the Construction Manager before bid date to verify the issuance of any clarifying Addenda.

6. The undersigned agrees to commence work under this Contract on the date established in the Contract Documents and to complete all work within the time specified in the Contract Documents.

7. The liquidated damages clause of the General Conditions and Agreement is hereby acknowledged.

8. It is understood that the District reserves the right to reject this bid and that the bid shall remain open to acceptance and is irrevocable for a period of ninety (90) days.

9. The following documents are attached hereto:

   - Bid Bond on the District's form or other security
   - Designated Subcontractors List
   - Site Visit Certification
   - Non-Collusion Declaration
   - DVBE Certification

10. Receipt and acceptance of the following Addenda is hereby acknowledged:

No. _____, Dated _____	No. _____, Dated _____
No. _____, Dated _____	No. _____, Dated _____
No. _____, Dated _____	No. _____, Dated _____

11. Bidder acknowledges that the license required for performance of the Work is a Class A or B license.

12. Bidder hereby certifies that Bidder is able to furnish labor that can work in harmony with all other elements of labor employed or to be employed on the Work.

13. Bidder specifically acknowledges and understands that if it is awarded the Contract, that it shall perform the Work of the Project while complying with all requirements of the Department of Industrial Relations.

14. Bidder hereby certifies that its bid includes sufficient funds to permit Bidder to comply with all local, state or federal labor laws or regulations during the Project, including payment of prevailing wage, and that Bidder will comply with the provisions of Labor Code section 2810(d) if awarded the Contract

15. Project Labor Agreement (Not used).

16. Federal Funds (Not used).

17. Bidder represents that it is competent, knowledgeable, and has special skills with respect to the nature, extent, and inherent conditions of the Work to be performed. Bidder further acknowledges that there are certain peculiar and inherent conditions existent in the construction of the Work that may create, during the Work, unusual or peculiar unsafe conditions hazardous to persons and property.

18. Bidder expressly acknowledges that it is aware of such peculiar risks and that it has the skill and experience to foresee and to adopt protective measures to adequately and safely perform the Work with respect to such hazards.

19. Bidder expressly acknowledges that it is aware that if a false claim is knowingly submitted (as the terms "claim" and "knowingly" are defined in the California False Claims Act, Gov. Code, § 12650 et seq.), the District will be entitled to civil remedies set forth in the California False Claim Act. It may also be considered fraud and the Contractor may be subject to criminal prosecution.

20. The undersigned Bidder certifies that it is, at the time of bidding, and shall be throughout the period of the Contract, licensed by the State of California to do the type of work required under the terms of the Contract Documents and registered as a public works contractor with the Department of Industrial Relations. Bidder further certifies that it is regularly engaged in the general class and type of work called for in the Contract Documents.

Furthermore, Bidder hereby certifies to the District that all representations, certifications, and statements made by Bidder, as set forth in this bid form, are true and correct and are made under penalty of perjury.

Dated this _____ day of _____ 20 ____

Name of Bidder: _____

Type of Organization: _____

Signed by: _____

Title of Signer: _____

Address of Bidder: _____

Taxpayer Identification No. of Bidder: _____

Telephone Number: _____

Fax Number: _____

E-mail: _____ Web Page: _____

Contractor's License No(s): No.: _____ Class: _____ Expiration Date: _____

No.: _____ Class:_____ Expiration Date: _____

No.: _____ Class:_____ Expiration Date: _____

Public Works Contractor Registration No.: _____

END OF DOCUMENT

DOCUMENT 00 52 13

AGREEMENT

THIS AGREEMENT IS MADE AND ENTERED INTO THIS _____ DAY OF _____ _____, 20___, by and between the Lodi Unified School District ("District") and _____ _____ ("Contractor") ("Agreement").

WITNESSETH: That the parties hereto have mutually covenanted and agreed, and by these presents do covenant and agree with each other, as follows:

1. **The Work**: Contractor agrees to furnish all tools, equipment, apparatus, facilities, labor, and material necessary to perform and complete in a good and workmanlike manner, the work of the following project:

   2020 Paving Project(s) – Phase II – Creekside Elementary School – Project #0913-8213

   ("Project" or "Contract" or "Work")

   It is understood and agreed that the Work shall be performed and completed as required in the Contract Documents including, without limitation, the Drawings and Specifications and submission of all documents required to secure funding or by the Division of the State Architect for close-out of the Project, under the direction and supervision of, and subject to the approval of, the District or its authorized representative.

2. **The Contract Documents**: The complete Contract consists of all Contract Documents as defined in the General Conditions and incorporated herein by this reference. Any and all obligations of the District and Contractor are fully set forth and described in the Contract Documents. All Contract Documents are intended to cooperate so that any Work called for in one and not mentioned in the other or vice versa is to be executed the same as if mentioned in all Contract Documents.

3. **Interpretation of Contract Documents**: Should any question arise concerning the intent or meaning of Contract Documents, including the Drawings or Specifications, the question shall be submitted to the District for interpretation. If a conflict exists in the Contract Documents, valid, written modifications, beginning with the most recent, shall control over this Agreement (if any), which shall control over the Special Conditions, which shall control over any Supplemental Conditions, which shall control over the General Conditions, which shall control over the remaining Division 0 documents, which shall control over Division 1 Documents which shall control over Division 2 through Division 49 documents, which shall control over figured dimensions, which shall control over large-scale drawings, which shall control over small-scale drawings. In no case shall a document calling for lower quality and/or quantity material or workmanship control. The decision of the District in the matter shall be final.

4. **Time for Completion**: It is hereby understood and agreed that the Work under this Contract shall be completed within **Sixty One (61)** consecutive calendar days ("Contract Time") from the date specified in the District's Notice to Proceed.

5. **Completion - Extension of Time**: Should the Contractor fail to complete this Contract, and the Work provided herein, within the time fixed for completion, due allowance being made for the contingencies provided for herein, the Contractor shall become liable to the District for all loss and damage that the District may suffer on account thereof. The Contractor shall coordinate its Work with the Work of all other contractors. The District shall not be liable for delays resulting from Contractor's failure to coordinate its Work with other contractors in a manner that will allow timely completion of Contractor's Work. Contractor shall be liable for delays to other contractors caused by Contractor's failure to coordinate its Work with the Work of other contractors.

6. **Liquidated Damages**: Time is of the essence for all work under this Agreement. It is hereby understood and agreed that it is and will be difficult and/or impossible to ascertain and determine the actual damage that the District will sustain in the event of and by reason of Contractor's delay; therefore, Contractor agrees that it shall pay to the District the sum of Five Hundred Dollars ($500.00) per day as liquidated damages for each and every day's delay beyond the time herein prescribed in finishing the Work.

   It is hereby understood and agreed that this amount is not a penalty.

   In the event that any portion of the liquidated damages is not paid to the District, the District may deduct that amount from any money due or that may become due the Contractor under this Agreement, and such deduction does not constitute a withholding or penalty. The District's right to assess liquidated damages is as indicated herein and in the General Conditions.

   The time during which the Contract is delayed for cause, as hereinafter specified, may extend the time of completion for a reasonable time as the District may grant, provided that Contractor has complied with the claims procedure of the Contract Documents. This provision does not exclude the recovery of damages by either party under other provisions in the Contract Documents.

7. **Loss Or Damage**: The District and its agents and authorized representatives shall not in any way or manner be answerable or suffer loss, damage, expense, or liability for any loss or damage that may happen to the Work, or any part thereof, or in or about the same during its construction and before acceptance, and the Contractor shall assume all liabilities of every kind or nature arising from the Work, either by accident, negligence, theft, vandalism, or any cause whatsoever; and shall hold the District and its agents and authorized representatives harmless from all liability of every kind and nature arising from accident, negligence, or any cause whatsoever.

8. **Insurance and Bonds**: Prior to issuance of the Notice to Proceed by the District, Contractor shall provide all required certificates of insurance, insurance endorsements, and payment and performance bonds as evidence thereof.

9. **Prosecution of Work**: If the Contractor should neglect to prosecute the Work properly or fail to perform any provisions of this Contract, the District, may, pursuant to the General Conditions and without prejudice to any other remedy it may have, make good such deficiencies and may deduct the cost thereof from the payment then or thereafter due the Contractor.

10. **Authority of Architect, Project Inspector, and DSA**: Contractor hereby acknowledges that the Architect(s), the Project Inspector(s), and the Division of the State Architect ("DSA") have authority to approve and/or suspend Work if the Contractor's Work does not comply with the requirements of the Contract Documents, Title 24 of the California Code of Regulations, and all applicable laws and regulations. The Contractor shall be liable for any delay caused by its non-compliant Work.

11. **Assignment of Contract**: Neither the Contract, nor any part thereof, nor any moneys due or to become due thereunder, may be assigned by the Contractor without the prior written approval of the District, nor without the written consent of the Surety on the Contractor's Performance Bond (the "Surety"), unless the Surety has waived in writing its right to notice of assignment.

12. **Classification of Contractor's License**: Contractor hereby acknowledges that it currently holds valid Type **Class A or B** Contractor's license(s) issued by the State of California, Contractors' State License Board, in accordance with division 3, chapter 9, of the Business and Professions Code and in the classification called for in the Contract Documents.

13. **Registration as Public Works Contractor**: The Contractor and all Subcontractors currently are registered as public works contractors with the Department of Industrial Relations, State of California, in accordance with Labor Code section 1771.1.

14. **Payment of Prevailing Wages**: The Contractor and all Subcontractors shall pay all workers on all Work performed pursuant to this Contract not less than the general prevailing rate of per diem wages and the general prevailing rate for holiday and overtime work as determined by the Director of the Department of Industrial Relations, State of California, for the type of work performed and the locality in which the work is to be performed within the boundaries of the District, pursuant to sections 1770 et seq. of the California Labor Code.

15. This Project is subject to labor compliance monitoring and enforcement by the Department of Industrial Relations pursuant to Labor Code section 1771.4 and Title 8 of the California Code of Regulations. Contractor specifically acknowledges and understands that it shall perform the Work of this Agreement while complying with all the applicable provisions of Division 2, Part 7, Chapter 1, of the Labor Code, including, without limitation, the requirement that the Contractor and all of its Subcontractors shall timely submit complete and accurate electronic certified payroll records as required by the Contract Documents, or the District may not issue payment.

16. **Contract Price**: In consideration of the foregoing covenants, promises, and agreements on the part of the Contractor, and the strict and literal fulfillment of each and every covenant, promise, and agreement, and as compensation agreed upon for the Work and construction, erection, and completion as aforesaid, the District covenants, promises, and agrees that it will well and truly pay and cause to be paid to the Contractor in full, and as the full Contract Price and compensation for construction, erection, and completion of the Work hereinabove agreed to be performed by the Contractor, the following price:

Creekside Elementary School

BASE BID:

_____ Dollars ($_____)

Allowance #1 – Unforeseen Conditions	$75,000.00
Allowance #2 – Soil Treatment	$100,000.00

TOTAL CONTRACT PRICE:

_____ Dollars ($_____)

in lawful money of the United States, which sum is to be paid according to the schedule provided by the Contractor and accepted by the District and subject to additions and deductions as provided in the Contract. This amount supersedes any previously stated and/or agreed to amount(s).

17. **No Representations:** No representations have been made other than as set forth in writing in the Contract Documents, including this Agreement. Each of the Parties to this Agreement warrants that it has carefully read and understood the terms and conditions of this Agreement and all Contract Documents, and that it has not relied upon the representations or advice of any other Party or any attorney not its own.

18. **Entire Agreement:** The Contract Documents, including this Agreement, set forth the entire agreement between the parties hereto and fully supersede any and all prior agreements, understandings, written or oral, between the parties hereto pertaining to the subject matter thereof.

19. **Severability**: If any term, covenant, condition, or provision in any of the Contract Documents is held by a court of competent jurisdiction to be invalid, void or unenforceable, the remainder of the provisions in the Contract Documents shall remain in full force and effect and shall in no way be affected, impaired, or invalidated thereby.

[Signatures on the following page]

IN WITNESS WHEREOF, accepted and agreed on the date indicated above:

CONTRACTOR	**LODI UNIFIED SCHOOL DISTRICT**
_____	_____
By: _____	By: _____
Title: _____	Title: _____
Contractor's License:_____	
DIR Registration:_____	

NOTE: If the party executing this Contract is a corporation, a certified copy of the by-laws, or of the resolution of the Board of Directors, authorizing the officers of said corporation to execute the Contract and the bonds required thereby must be attached hereto.

END OF DOCUMENT

DOCUMENT 00 57 00

ESCROW AGREEMENT IN LIEU OF RETENTION
(Public Contact Code Section 22300)

(Note: Contractor must use this form.)

This Escrow Agreement in Lieu of Retention ("Escrow Agreement") is made and entered into this _____ day of _____, 20___, by and between the Lodi Unified School District ("District"), whose address is 1305 E. Vine Street , Lodi , California 95240 , and _____ ("Contractor"), whose address is _____ _____ , and _____ ("Escrow Agent"), a state or federally chartered bank in the state of California, whose address is _____ _____.

For the consideration hereinafter set forth, District, Contractor, and Escrow Agent agree as follows:

1. Pursuant to section 22300 of Public Contract Code of the State of California, which is hereby incorporated by reference, Contractor has the following two (2) options:

   ☐ Deposit securities with Escrow Agent as a substitute for retention earnings required to be withheld by District pursuant to the Construction Contract No.___ entered into between District and Contractor for the _____ _____ Project, in the amount of _____ Dollars ($_____) dated, _____, 20_____, (the "Contract"); **or**

   ☐ On written request of Contractor, District shall make payments of the retention earnings for the above referenced Contract directly to Escrow Agent.

   When Contractor deposits the securities as a substitute for Contract earnings (first option), Escrow Agent shall notify District within ten (10) calendar days of the deposit. The market value of the securities at the time of substitution and at all times from substitution until the termination of the Escrow Agreement shall be at least equal to the cash amount then required to be withheld as retention under the terms of the Contract between District and Contractor.

   Securities shall be held in the name of Lodi Unified School District, and shall designate Contractor as beneficial owner.

2. District shall make progress payments to Contractor for those funds which otherwise would be withheld from progress payments pursuant to Contract provisions, provided that Escrow Agent holds securities in form and amount specified above.

3. When District makes payment of retentions earned directly to Escrow Agent, Escrow Agent shall hold them for the benefit of Contractor until the time that the escrow created under this Escrow Agreement is terminated. Contractor may direct the investment of the payments into securities. All terms and conditions of this Escrow Agreement and the rights and responsibilities of the Parties shall be equally applicable and binding when District pays Escrow Agent directly.

4. Contractor shall be responsible for paying all fees for the expenses incurred by Escrow Agent in administering the Escrow Account, and all expenses of District. The District will charge Contractor $_____ for each of District's deposits to the escrow account. These expenses and payment terms shall be determined by District, Contractor, and Escrow Agent.

5. Interest earned on securities or money market accounts held in escrow and all interest earned on that interest shall be for sole account of Contractor and shall be subject to withdrawal by Contractor at any time and from time to time without notice to District.

6. Contractor shall have the right to withdraw all or any part of the principal in the Escrow Account only by written notice to Escrow Agent accompanied by written authorization from District to Escrow Agent that District consents to withdrawal of amount sought to be withdrawn by Contractor.

7. District shall have the right to draw upon the securities and/or withdraw amounts from the Escrow Account in the event of default by Contractor. Upon seven (7) days' written notice to Escrow Agent from District of the default, if applicable, Escrow Agent shall immediately convert the securities to cash and shall distribute the cash as instructed by District. Escrow Agent shall not be authorized to determine the validity of any notice of default given by District pursuant to this paragraph, and shall promptly comply with District's instructions to pay over said escrowed assets. Escrow Agent further agrees to not interplead the escrowed assets in response to a conflicting demand.

8. Upon receipt of written notification from District certifying that the Contract is final and complete, and that Contractor has complied with all requirements and procedures applicable to the Contract, Escrow Agent shall release to Contractor all securities and interest on deposit less escrow fees and charges of the Escrow Account. The escrow shall be closed immediately upon disbursement of all monies and securities on deposit and payments of fees and charges.

9. Escrow Agent shall rely on written notifications from District and Contractor pursuant to Paragraphs 5 through 8, inclusive, of this Escrow Agreement and District and Contractor shall hold Escrow Agent harmless from Escrow Agent's release and disbursement of securities and interest as set forth above.

[REMAINDER OF PAGE INTENTIONALLY LEFT BLANK]

10. Names of persons who are authorized to give written notice or to receive written notice on behalf of District and on behalf of Contractor in connection with the foregoing, and exemplars of their respective signatures are as follows:

On behalf of District:

_____
Title

_____
Name

_____
Signature

_____
Address

On behalf of Contractor:

_____
Title

_____
Name

_____
Signature

_____
Address

On behalf of Escrow Agent:

_____
Title

_____
Name

_____
Signature

_____
Address

At the time that the Escrow Account is opened, District and Contractor shall deliver to Escrow Agent a fully executed copy of this Agreement.

IN WITNESS WHEREOF, the parties have executed this Agreement by their proper officers on the date first set forth above.

On behalf of District:

_____
Title

_____
Name

_____
Signature

_____
Address

On behalf of Contractor:

_____
Title

_____
Name

_____
Signature

_____
Address

END OF DOCUMENT

DOCUMENT 01 21 00

ALLOWANCE

PART 1 - GENERAL

1.1 SECTION INCLUDES

A. Non-specified work.

1.2 RELATED SECTIONS

A. Document 01 10 00 (Summary of Work)

B. Document 01 29 00 (Payments and Completion)

C. Document 01 32 19 (Submittal Procedures)

1.3 ALLOWANCES

A. Included in the Contract, a stipulated sum/price of Seventy Five Thousand Dollars ($75,000.00) for unforeseen conditions and One Hundred Thousand Dollars ($100,000.00) for soil treatment for Creekside Elementary School as allowances within the limits set forth in the Bridging Documents. This Allowance shall not be utilized without written approval by the District.

B. Contractor's costs for products, delivery, installation, labor, insurance, payroll, taxes, bonding and equipment rental will be included in Allowance Expenditure Directive authorizing expenditure of funds from this Allowance.

C. Funds will be drawn from Allowance only with District approval evidenced by an Allowance Expenditure Directive.

D. At Contract closeout, funds remaining in Allowance will be credited to District by Change Order.

PART 2 PRODUCTS

Not used.

PART 3 EXECUTION

Not used.

END OF DOCUMENT

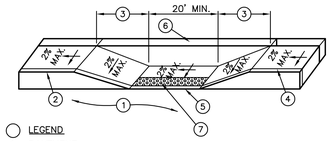

LEGEND

1. PAVEMENT.
2. TOP FACE OF CURB, STANDARD 6" HIGH.
3. 8.3% (1:12) MAXIMUM SLOPE.
4. SCORE MARK, 6" BACK OF CURB.
5. TRANSITION SHALL BE FLUSH AND FREE OF ABRUPT CHANGE PER CALIFORNIA BUILDING CODE, TITLE 24, SECTION 11B-406.5.8.
6. 6" WIDE RETAINING CURB, HEIGHT TO BE DETERMINED BY PROJECTED BACK OF WALK GRADE AT EACH END OF CURB RETURN AND BACK OF LANDING SURFACE.
7. PLACE 36" WIDE PREFABRICATED CAST IN PLACE DETECTABLE WARNING TILE BY ARMOR-TILE OR APPROVED EQUAL. (2 / C2.1)

1 / C2.1 ACCESSIBLE LOADING

NO SCALE

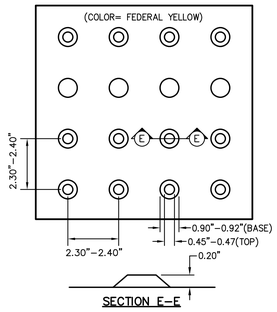

2 / C2.1 TRUNCATED DOMES

NO SCALE

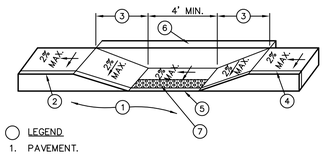

LEGEND

1. PAVEMENT.
2. TOP FACE OF CURB, STANDARD 6" HIGH.
3. 8.3% (1:12) MAXIMUM SLOPE.
4. SCORE MARK, 6" BACK OF CURB.
5. TRANSITION SHALL BE FLUSH AND FREE OF ABRUPT CHANGE PER CALIFORNIA BUILDING CODE, TITLE 24, SECTION 11B-406.5.8.
6. 6" WIDE RETAINING CURB, HEIGHT TO BE DETERMINED BY PROJECTED BACK OF WALK GRADE AT EACH END OF CURB RETURN AND BACK OF LANDING SURFACE.
7. PLACE 36" WIDE PREFABRICATED CAST IN PLACE DETECTABLE WARNING TILE BY ARMOR-TILE OR APPROVED EQUAL. (2 / C2.1)

3 / C2.1 ACCESSIBLE RAMP

NO SCALE

GRAPHIC SCALE

20' 0 10' 20' 40'

(IN FEET) 1 inch = 20 feet

NORTH

THIS DRAWING MAY HAVE BEEN ENLARGED OR REDUCED.

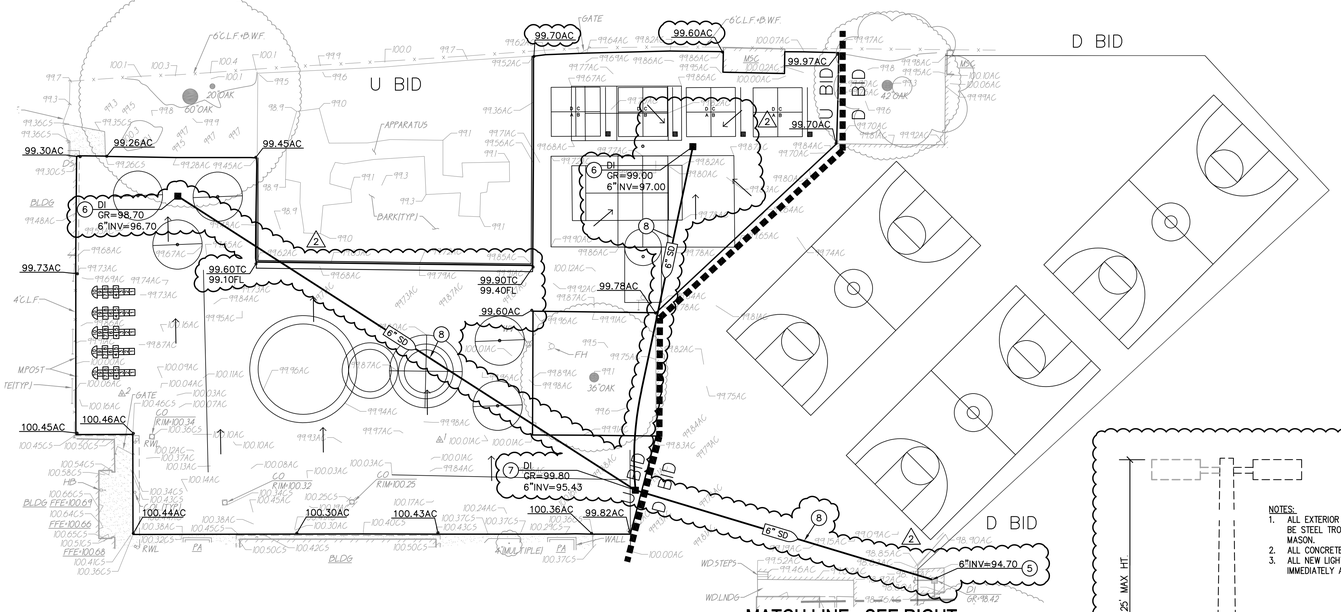

GRADING NOTES

1. MATCH EXISTING GRADE/ELEVATION.
2. REMOVE EXISTING INLET IN INSTALL CONTECH INLET #1.
3. REMOVE EXISTING INLET AND INSTALL CONTECH INLET #2.
4. REMOVE EXISTING INLET AND INSTALL CONTECH INLET #3.
5. CONNECT TO EXISTING INLET.
6. CONSTRUCT DROP INLET PER (5 / C2.1)
7. INSTALL CONTECH INLET #4.
8. PLACE 6" STORM DRAIN PER (6 / C2.1)
9. REMOVE AND INSTALL 8" STORM DRAIN PER (6 / C2.1)

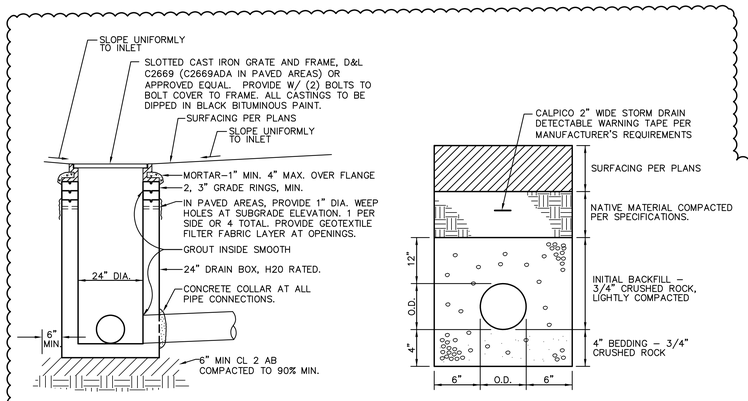

5 / C2.1 DROP INLET

NO SCALE

6 / C2.1 STORM DRAIN TRENCH

NO SCALE

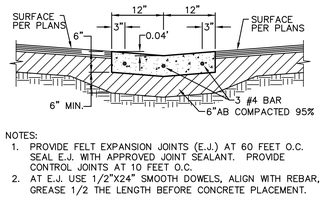

NOTES:

1. PROVIDE FELT EXPANSION JOINTS (E.J.) AT 60 FEET O.C. SEAL E.J. WITH APPROVED JOINT SEALANT. PROVIDE CONTROL JOINTS AT 10 FEET O.C.
2. AT E.J. USE 1/2"X24" SMOOTH DOWELS, ALIGN WITH REBAR, GREASE 1/2 THE LENGTH BEFORE CONCRETE PLACEMENT.

7 / C2.1 CONCRETE VALLEY GUTTER

NO SCALE

NOTES:

1. ALL EXTERIOR CONCRETE TOP AND SIDES SHALL BE STEEL TROWEL FINISHED BY EXPERIENCED MASON.
2. ALL CONCRETE SHALL BE CLASS B.
3. ALL NEW LIGHT SHALL RECEIVE NEW PULL BOX IMMEDIATELY ADJACENT TO LIGHT, SEE PLAN.

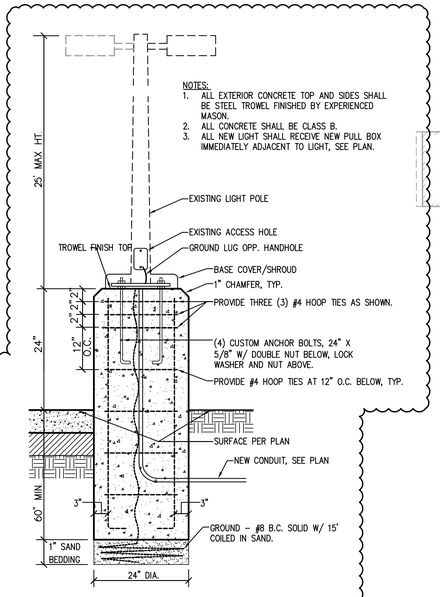

4 / C2.1 LIGHT POLE

NO SCALE

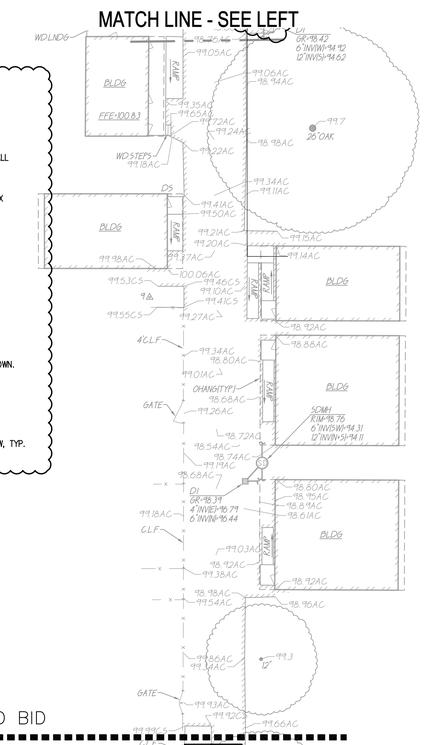

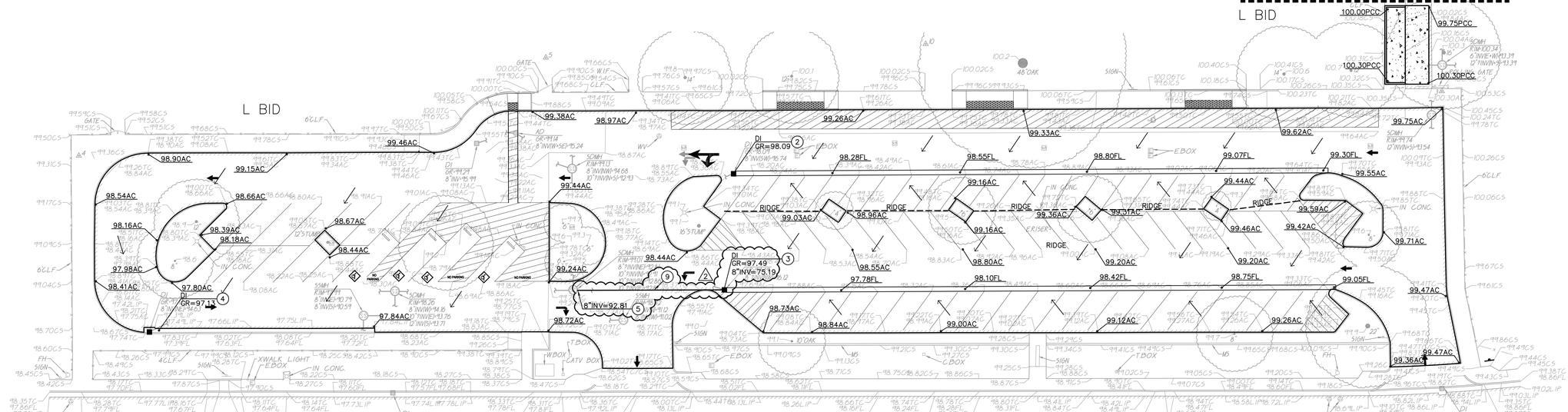

REVISIONS			
NO.	DESCRIPTION	DATE	BY
2	ADDENDUM 1	03-12-20	

AGENCY APPROVAL

DESIGNED:	TF
DRAWN:	ML
CHECKED:	TF
DATE:	01-06-20

HORIZONTAL SCALE: AS NOTED

VERTICAL SCALE: AS NOTED

JOB NO.: 19-091

A.P.N. –

BENCHMARK NO. –

ELEV. –

PROFESSIONAL ENGINEER REGISTERED THOMAS E. FASSBENDER 3/12/2020 CIVIL STATE OF CALIFORNIA

WARREN CONSULTING ENGINEERS, INC.
1117 WINDFIELD WAY, SUITE 110
EL DORADO HILLS, CA 95762 | (916) 985-1870

TITLE: GRADING PLAN

PROJECT: CREEKSIDE ELEMENTARY SCHOOL PAVING LODI USD

SAN JOAQUIN CO., CALIFORNIA

SHEET NO. C2.1

FILENAME: I:\19-091\CIVIL\DWG\19-091-C2.1.DWG PLOTTED: Thursday, March 12, 2020

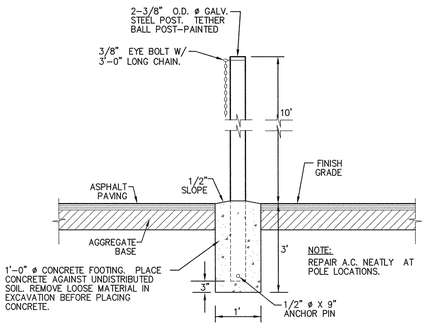

1 / C3.1 TETHER BALL POST

NO SCALE

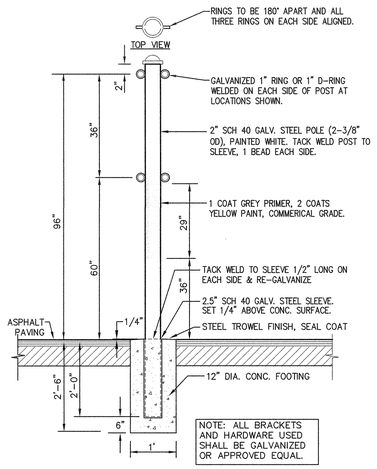

2 / C3.1 VOLLEYBALL REMOVABLE POLE

NO SCALE

PAVING GENERAL NOTES:

1. ASPHALT MIX SHALL MEET CALTRANS SPECIFICATIONS FOR TYPE B ASPHALTIC CONCRETE. REFERENCE CALTRANS S AND PROJECT SPECIFICATIONS.
2. AGGREGATE BASE SHALL MEET CALTRANS SPECIFICATIONS FOR CLASS II AGGREGATE BASE.
3. ALL AGGREGATE BASE SHALL BE MOISTURE CONDITIONED TO, OR SLIGHTLY ABOVE, OPTIMUM MOISTURE CONTENT AND COMPACTED TO 95% RELATIVE COMPACTION.
4. RECYCLED ASPHALT MAY BE USED AS CONCRETE AND ASPHALT BASE MATERIAL PROVIDED IT MEETS CITY OF SACRAMENTO SPECIFICATIONS FOR CLASS II AB.
5. PAVEMENT SUBGRADE PREPARATION, I.E. SCARIFICATION, MOISTURE CONDITIONING, AND COMPACTION SHALL BE PERFORMED AFTER;
   A. POT HOLING ALL EXISTING UTILITIES.
   B. THE INSTALLATION OF UNDERGROUND UTILITIES AND TRENCHES BACKFILLED IN ACCORDANCE WITH THESE PLANS.
6. ALL AREAS DISTURBED BY GRADING, DEMOLITION, OR CONSTRUCTION ACCESS, WHICH ARE NOT SURFACED BY THIS SET OF PLANS, OR LANDSCAPE PLANS, SHALL BE RESTORED.
7. REFER TO GRADING PLANS FOR CURBS, CURB GUTTERS, VALLEY GUTTERS, AND OTHER CONCRETE STRUCTURES AND PAVING FEATURES NOT SPECIFICALLY NOTED ON THIS PLAN.
8. ADJUST TO FINISH GRADE ALL BOXES, FRAMES, COVERS SLEEVES, POST HOLES, GRATES, ETC. FOUND IN NEW ASPHALT OR CONCRETE PAVING AREAS, WHICH ARE NOT NOTED FOR REMOVAL. CLEAN/OR REPLACE AS NECESSARY TO ENSURE PROPER SEATING.

GRAPHIC SCALE

20' 0 10' 20' 40'

(IN FEET) 1 inch = 20 feet

NORTH

THIS DRAWING MAY HAVE BEEN ENLARGED OR REDUCED.

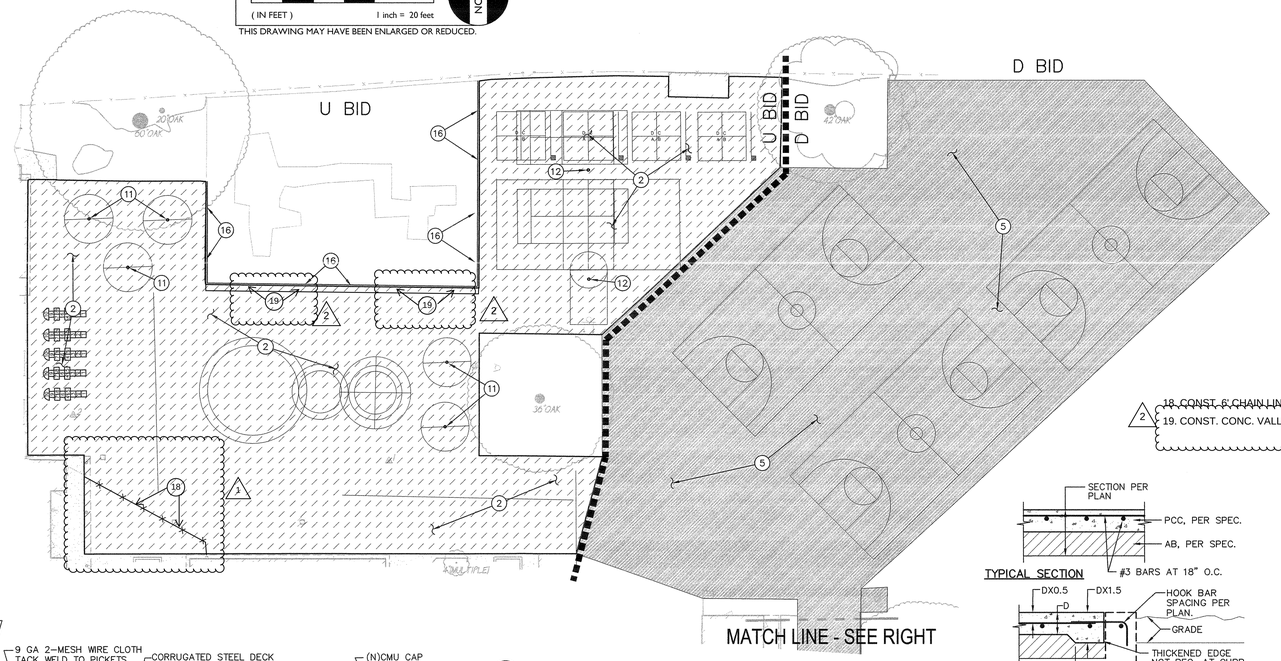

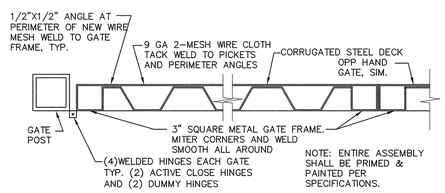

3 / C3.1 TRASH ENCLOSURES GATES PLAN

NO SCALE

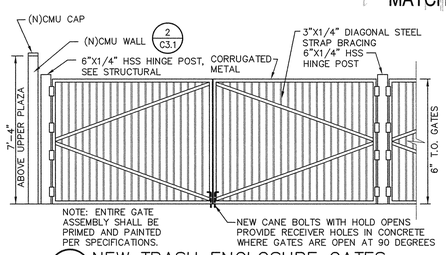

5 / C3.1 NEW TRASH ENCLOSURE GATES

NO SCALE

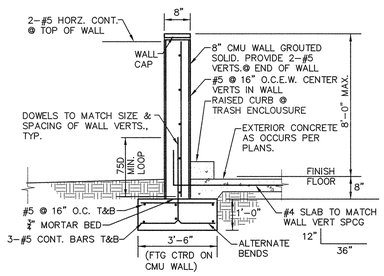

4 / C3.1 TRASH ENCLOSURE CMU WALL

NO SCALE

PAVING LEGEND

1. TYPE 1 PAVING
   PLACE 3" AC OVER 12" CLASS II AB ON SUBGRADE COMPACTED PER SPECIFICATIONS.
2. TYPE 2 PAVING
   PLACE 3" AC OVER 8" CLASS II AB ON SUBGRADE COMPACTED PER SPECIFICATIONS.
3. TYPE 3 PAVING
   PLACE 5" PCC WITH #4 REBAR @ 18" O.C.E.W. ON SUBGRADE COMPACTED PER SPECIFICATIONS. (6 / C3.1)
4. TYPE 4 PAVING
   PLACE 6" PCC OVER 6" CL2 AB WITH #4 REBAR @ 18" O.C.E.W. ON SUBGRADE COMPACTED PER SPECIFICATIONS. (6 / C3.1)
5. TYPE 5 PAVING
   PROVIDE CRACK FILL AND SEAL COAT

PAVING NOTES

11. PROVIDE TETHERBALL POLE PER (1 / C3.1)
12. PROVIDE VOLLEYBALL REMOVABLE POLE W/SLEEVE PER (2 / C3.1)
13. CONSTRUCT ACCESSIBLE LOADING AREA (1 / C2.1) (3 / 3.1)
14. CONSTRUCT TRASH ENCLOSURE (4 / 3.1) (5 / 3.1)
15. CONST. CONCRETE CURB (5 / C5.1)
16. CONSTRUCT CONCRETE APPARATUS CURB (6 / C5.1)
17. CONSTRUCT ACCESSIBLE CONCRETE RAMP (3 / C2.1)
18. CONST. 6' CHAIN LINK FENCE
19. CONST. CONC. VALLEY GUTTER (7 / C2.1)

TYPICAL SECTION

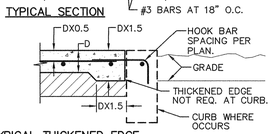

TYPICAL THICKENED EDGE

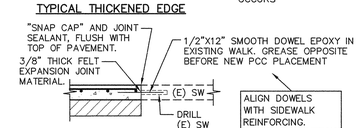

CONNECTION TO (E) CONCRETE

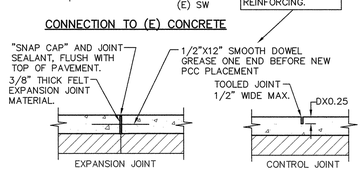

TYPICAL JOINTS

NOTES:
1. PROVIDE FELT EXPANSION JOINTS AT 20 FEET O.C. MIN.
2. PROVIDE CONTROL JOINTS AT 10 FEET O.C. MIN.
3. EXPANSION OR CONTROL JOINTS SHALL NOT EXCEED 1/2" IN SURFACE WIDTH.

6 / C3.1 CONCRETE SIDEWALK

NO SCALE

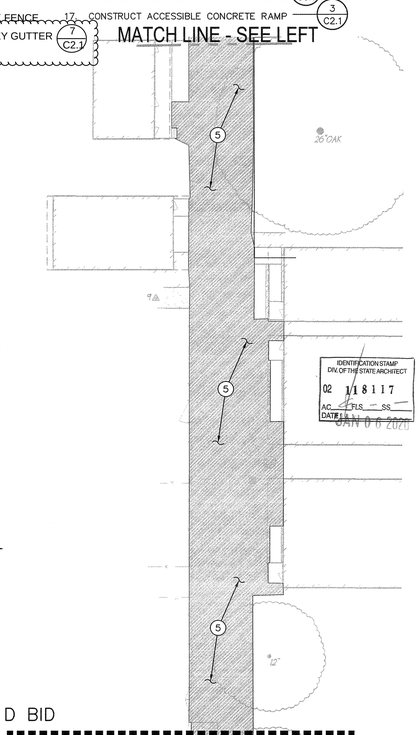

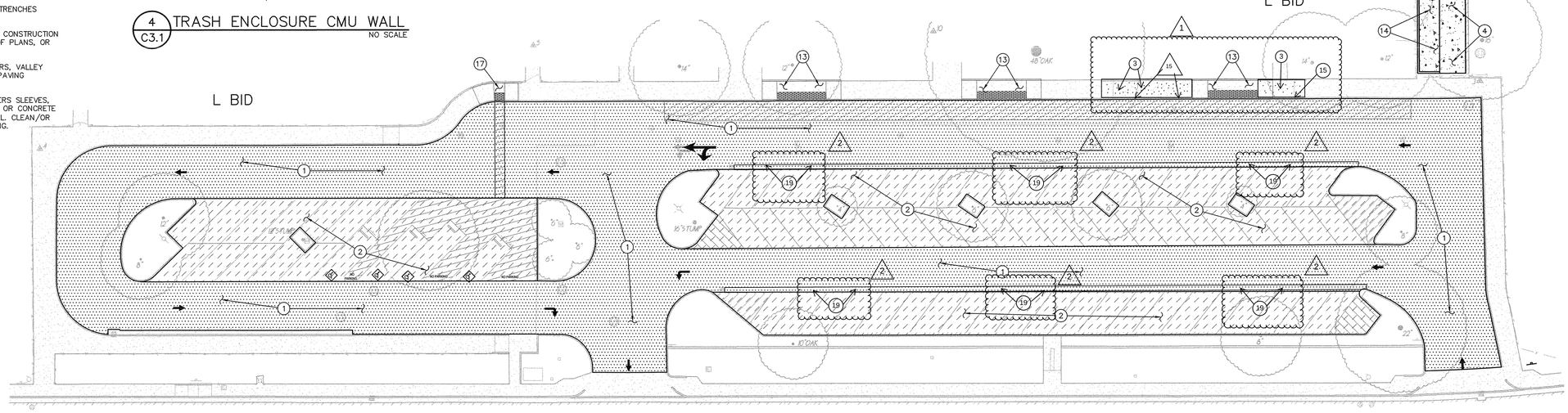

IDENTIFICATION STAMP
CITY OF THE STATE ARCHITECT
02 118117
AC PLS SS
DATE JAN 06 2020

REGISTERED PROFESSIONAL ENGINEER THOMAS G. FASSBENDER NO. C48254 CIVIL STATE OF CALIFORNIA 1/3/2020

WCE
WARREN CONSULTING ENGINEERS, INC.
4340 KEAT GARDEN DRIVE, SUITE 110
EL DORADO HILLS, CA 95762 | (916) 985-1870

NO.	DESCRIPTION	DATE	BY	DATE
1	QC COMMENTS	02/14/20		
2	ADDENDUM 1	03/11/20		

REVISIONS

AGENCY APPROVAL

DESIGNED: TF	DRAWN: ML	CHECKED: TF	DATE: 01-06-20

HORIZONTAL SCALE: AS NOTED
VERTICAL SCALE: AS NOTED
JOB NO.: 19-091
A.P.N.
BENCHMARK NO.
ELEV.

TITLE: PAVING PLAN
PROJECT: CREEKSIDE ELEMENTARY SCHOOL PAVING LODI USD
SAN JOAQUIN CO. CALIFORNIA

SHEET NO. C3.1

FILENAME:I:\19-091\CIVIL\DWG\19-091-C3.1.DWG PLOTTED:Friday, January 03, 2020

Sizing Estimate

Provided by Sarah Merrill on January 17, 2020

Creekside Elementary

Lodi, CA

Site information:

Inlet	Water Quality Flow Rate (cfs)	Peak Flow Rate (cfs)
1	0.08	0.80
2	0.08	0.80
3	0.07	0.79

StormFilter Parameters:

Cartridge Size	Hydraulic Loading Rate (gpm/sf)	Per-Cartridge Flow Rate (cfs)	Filtration Media
18”	2.0	0.033	ZPG
27”	2.0	0.050	ZPG

System Sizing Estimates:

The StormFilter is sized by calculating the water quality flow rate associated with the design storm. The water quality flow rate was determined using the rational method and was provided by the engineer of record. Utilizing cartridge sizes with unit flows as listed above, the resulting system size is:

Area	StormFilter Model	Cartridge Size	Number of Cartridges
1	SFCB-S-3	18”	3
2	48” SFMH	27”	2
3	SFCB-S-3	18”	3

The Catch Basin StormFilter and 48” StormFIlter Manhole configurations have an internal bypass capacity capable of conveying 1.0 cfs. Thus, no external bypass structure is required.

Thank you for your inquiry. For additional information, please contact:

Sarah Merrill
503.258.3150
smerrill@conteches.com

Creekside Elementary
Inlet 1
Qwq=0.08cfs
Qpeak=.80cfs
Gr=98.10
8”inv=96.75

Inlet 2
Qwq=0.08
Qpeak=0.80cfs
Gr=97.50
8”inv=91.15

Inlet 3
Qwq=0.07cfs
Qpeak=0.79cfs
Gr=97.13
8”inv=94.63

Inlet 4
Qwq=0.10cfs
Qpeak=1.0cfs
Gr=99.80
6”inv(out)=95.43
6"inv(in)=95.53

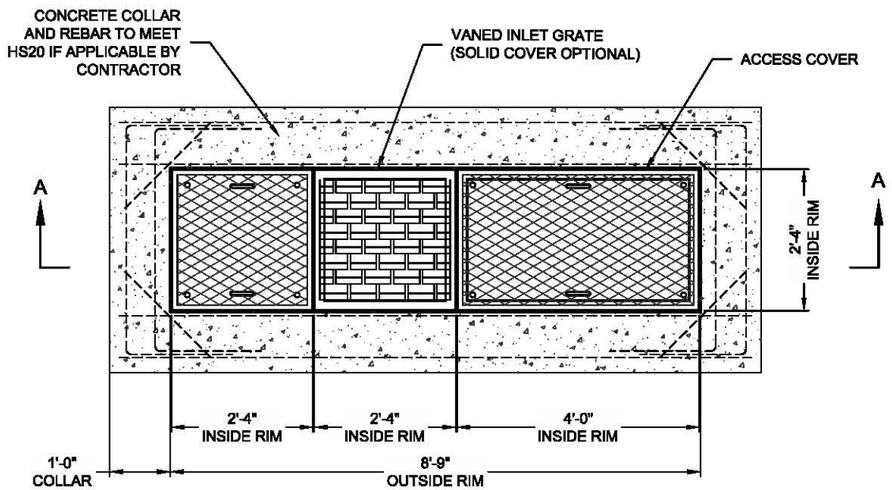

PLAN VIEW

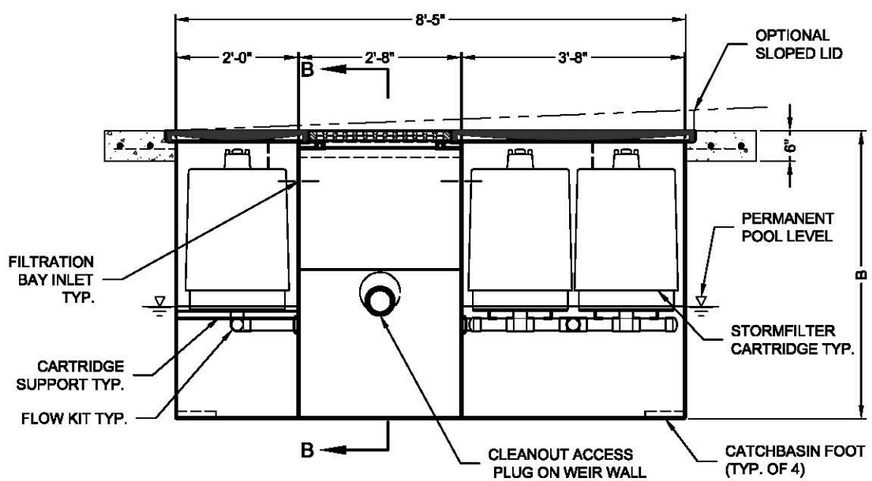

SECTION A-A

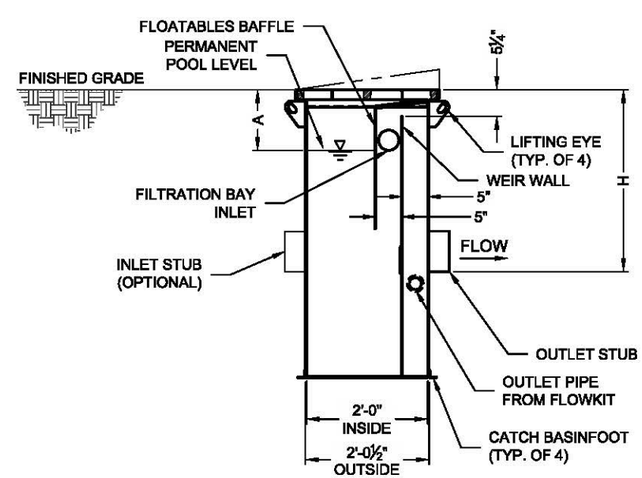

SECTION B-B

STORMFILTER STEEL CATCHBASIN DESIGN NOTES

STORMFILTER TREATMENT CAPACITY IS A FUNCTION OF THE CARTRIDGE SELECTION AND THE NUMBER OF CARTRIDGES. 3 CARTRIDGE CATCHBASIN HAS A MAXIMUM OF THREE CARTRIDGES. SYSTEM IS SHOWN WITH A 27" CARTRIDGE, AND IS ALSO AVAILABLE WITH AN 18" CARTRIDGE. STORMFILTER CATCHBASIN CONFIGURATIONS ARE AVAILABLE WITH A DRY INLET BAY FOR VECTOR CONTROL.
PEAK HYDRAULIC CAPACITY PER TABLE BELOW. IF THE SITE CONDITIONS EXCEED PEAK HYDRAULIC CAPACITY, AN UPSTREAM BYPASS STRUCTURE IS REQUIRED.

CARTRIDGE SELECTION

CARTRIDGE HEIGHT	27"			18"			18" DEEP		
RECOMMENDED HYDRAULIC DROP (H)	3.05'			2.3'			3.3'		
SPECIFIC FLOW RATE (gpm/sf)	2 gpm/sf	1.67* gpm/sf	1 gpm/sf	2 gpm/sf	1.67* gpm/sf	1 gpm/sf	2 gpm/sf	1.67* gpm/sf	1 gpm/sf
CARTRIDGE FLOW RATE (gpm)	22.5	18.79	11.25	15	12.53	7.5	15	12.53	7.5
PEAK HYDRAULIC CAPACITY	1.0			1.0			1.8		
INLET PERMANENT POOL LEVEL (A)	1'-0"			1'-0"			2'-0"		
OVERALL STRUCTURE HEIGHT (B)	4'-9"			3'-9"			4'-9"		

* 1.67 gpm/sf SPECIFIC FLOW RATE IS APPROVED WITH PHOSPHOSORB ® (PSORB) MEDIA ONLY

GENERAL NOTES

1. CONTECH TO PROVIDE ALL MATERIALS UNLESS NOTED OTHERWISE.
2. FOR SITE SPECIFIC DRAWINGS WITH DETAILED STORMFILTER CATCHBASIN STRUCTURE DIMENSIONS AND WEIGHTS, PLEASE CONTACT YOUR CONTECH ANGINEERED SOLUTIONS LLC REPRESENTATIVE. www.contechES.com
3. STORMFILTER CATCHBASIN WATER QUALITY STRUCTURE SHALL BE IN ACCORDANCE WITH ALL DESIGN DATA AND INFORMATION CONTAINED IN THIS DRAWING.
4. INLET SHOULD NOT BE LOWER THAN OUTLET. INLET (IF APPLICABLE) AND OUTLET PIPING TO BE SPECIFIED BY ENGINEER AND PROVIDED BY CONTRACTOR.
5. MANUFACTURER TO APPLY A SURFACE BEAD WELD IN THE SHAPE OF THE LETTER "O" ABOVE THE OUTLET PIPE STUB ON THE EXTERIOR SURFACE OF THE STEEL SFCB.
6. STORMFILTER CATCHBASIN EQUIPPED WITH 4 INCH (APPROXIMATE) LONG STUBS FOR INLET (IF APPLICABLE) AND OUTLET PIPING. STANDARD OUTLET STUB IS 8 INCHES IN DIAMETER. MAXIMUM OUTLET STUB IS 15 INCHES IN DIAMETER. CONNECTION TO COLLECTION PIPING CAN BE MADE USING FLEXIBLE COUPLING BY CONTRACTOR.
7. STEEL STRUCTURE TO BE MANUFACTURED OF 1/4 INCH STEEL PLATE. CASTINGS SHALL MEET AASHTO M306 LOAD RATING. TO MEET HS20 LOAD RATING ON STRUCTURE, A CONCRETE COLLAR IS REQUIRED. WHEN REQUIRED, CONCRETE COLLAR WITH #4 REINFORCING BARS TO BE PROVIDED BY CONTRACTOR.
8. FILTER CARTRIDGES SHALL BE MEDIA-FILLED, PASSIVE, SIPHON ACTUATED, RADIAL FLOW, AND SELF CLEANING. RADIAL MEDIA DEPTH SHALL BE 7-INCHES. FILTER MEDIA CONTACT TIME SHALL BE AT LEAST 38 SECONDS.
9. SPECIFIC FLOW RATE IS EQUAL TO THE FILTER TREATMENT CAPACITY (gpm) DIVIDED BY THE FILTER CONTACT SURFACE AREA (sq ft).

INSTALLATION NOTES

A. ANY SUB-BASE, BACKFILL DEPTH, AND/OR ANTI-FLOTATION PROVISIONS ARE SITE-SPECIFIC DESIGN CONSIDERATIONS AND SHALL BE SPECIFIED BY ENGINEER OF RECORD.
B. CONTRACTOR TO PROVIDE EQUIPMENT WITH SUFFICIENT LIFTING AND REACH CAPACITY TO LIFT AND SET THE CATCHBASIN (LIFTING CLUTCHES PROVIDED).
C. CONTRACTOR TO TAKE APPROPRIATE MEASURES TO PROTECT CARTRIDGES FROM CONSTRUCTION-RELATED EROSION RUNOFF.

3-CARTRIDGE CATCHBASIN STORMFILTER DATA

STRUCTURE ID	XXX
WATER QUALITY FLOW RATE (cfs)	X.XX
PEAK FLOW RATE (<1 cfs)	X.XX
RETURN PERIOD OF PEAK FLOW (yrs)	XXX
CARTRIDGE FLOW RATE (gpm)	XX
MEDIA TYPE (PERLITE, ZPG, PSORB)	XXXXX
RIM ELEVATION	XXX.XX'

PIPE DATA:	I.E.	DIAMETER
INLET STUB	XXX.XX'	XX"
OUTLET STUB	XXX.XX'	XX"

CONFIGURATION

SLOPED LID	YES\NO
SOLID COVER	YES\NO

NOTES/SPECIAL REQUIREMENTS:

The Stormwater Management StormFilter®

THIS PRODUCT MAY BE PROTECTED BY ONE OR MORE OF THE FOLLOWING U.S. PATENTS: 4,985,685; 5,082,556; 5,707,527; 5,893,970; 5,907,955; 5,909,349; 5,910,249; 5,913,443; 5,919,368; RELATED FOREIGN PATENTS, OR OTHER PATENTS PENDING.

CONTECH® ENGINEERED SOLUTIONS LLC
www.contechES.com
9025 Centre Pointe Dr., Suite 400, West Chester, OH 45069
800-526-3999 513-645-7000 513-645-7993 FAX

3 CARTRIDGE CATCHBASIN STORMFILTER STANDARD DETAIL

I:\COMMON\CAD\TREATMENT\10 STORMFILTER\40 STANDARD DRAWINGS\SFCB\SFCB-SIDWG\SFCB3-DTL.DWG 7/8/2016 2:46 PM

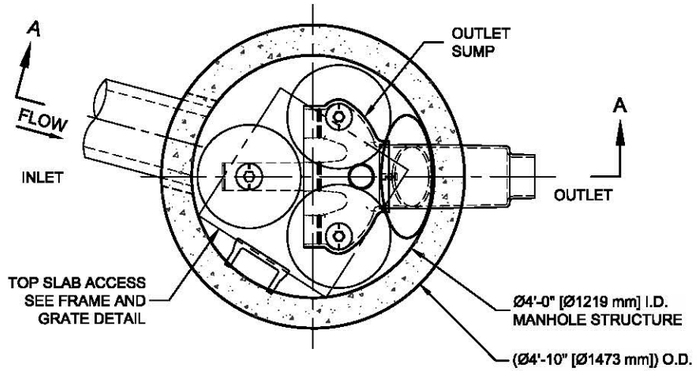

PLAN VIEW

STANDARD OUTLET RISER
FLOWKIT: 40A

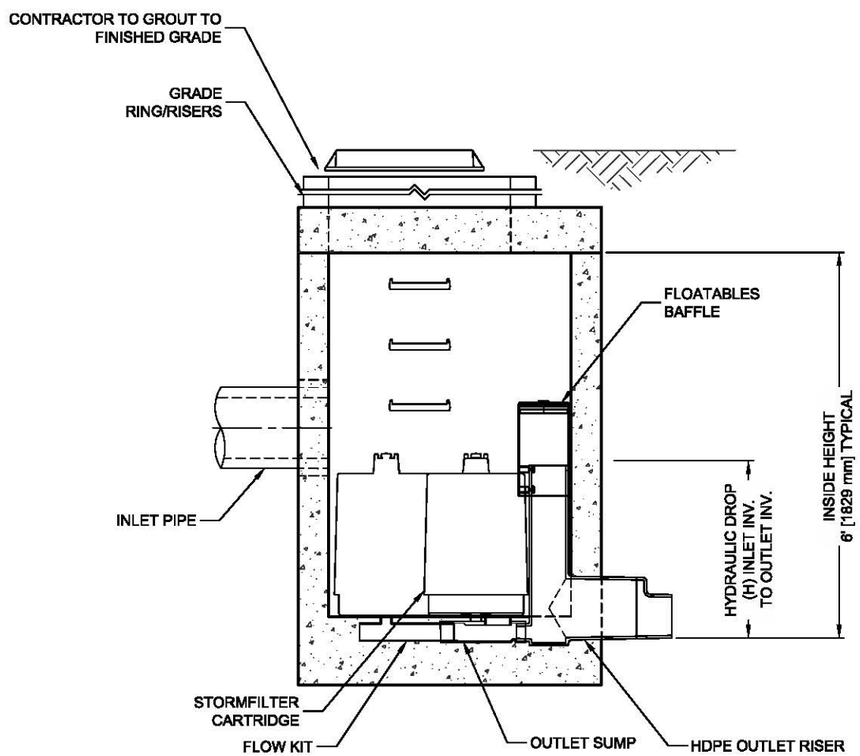

SECTION A-A

The Stormwater Management
StormFilter®

THIS PRODUCT MAY BE PROTECTED BY ONE OR MORE OF THE FOLLOWING U.S. PATENTS: 5,322,629; 5,524,576; 5,707,527; 5,985,157; 6,027,639; 6,649,046; RELATED FOREIGN PATENTS, OR OTHER PATENTS PENDING.

STORMFILTER DESIGN NOTES

STORMFILTER TREATMENT CAPACITY IS A FUNCTION OF THE CARTRIDGE SELECTION AND THE NUMBER OF CARTRIDGES. THE STANDARD MANHOLE STYLE IS SHOWN WITH THE MAXIMUM NUMBER OF CARTRIDGES (3). VOLUME SYSTEM IS ALSO AVAILABLE WITH MAXIMUM 3 CARTRIDGES.
Ø4 [1219 mm] MANHOLE STORMFILTER PEAK HYDRAULIC CAPACITY IS 1.0 CFS [28.3 L/s] . IF THE SITE CONDITIONS EXCEED 1.0 CFS [28.3 L/s] AN UPSTREAM BYPASS STRUCTURE IS REQUIRED.

CARTRIDGE SELECTION

CARTRIDGE HEIGHT	27" [686 mm]			18" [458 mm]			LOW DROP		
RECOMMENDED HYDRAULIC DROP (H)	3.05' [930 mm]			2.3' [700 mm]			1.8' [550 mm]		
SPECIFIC FLOW RATE (gpm/sf) [L/s/m^2]	2 [1.30]	1.67* [1.08]	1 [0.65]	2 [1.30]	1.67* [1.08]	1 [0.65]	2 [1.30]	1.67* [1.08]	1 [0.65]
CARTRIDGE FLOW RATE (gpm) [L/s]	22.5 [1.42]	18.79 [1.19]	11.25 [0.71]	15 [0.95]	12.53 [0.79]	7.5 [0.44]	10 [0.63]	8.35 [0.54]	5 [0.32]

* 1.67 gpm/sf [1.08 L/s/m^2] SPECIFIC FLOW RATE IS APPROVED WITH PHOSPHOSORB® (PSORB) MEDIA ONLY

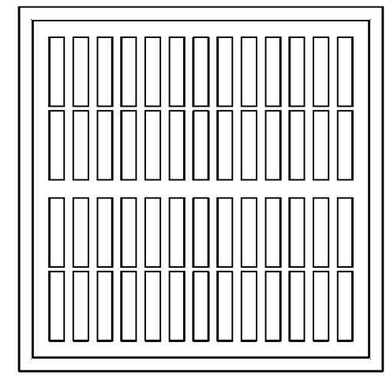

30" [762] SQ. FRAME AND GRATE

(ALSO AVAILABLE IN ROUND)
N.T.S.

SITE SPECIFIC DATA REQUIREMENTS

STRUCTURE ID	*
WATER QUALITY FLOW RATE (cfs) [L/s]	*
PEAK FLOW RATE (cfs) [L/s]	*
RETURN PERIOD OF PEAK FLOW (yrs)	*
CARTRIDGE HEIGHT (SEE TABLE ABOVE)	*
NUMBER OF CARTRIDGES REQUIRED	*
CARTRIDGE FLOW RATE	*
MEDIA TYPE (PERLITE, ZPG, PSORB)	*

PIPE DATA:	I.E.	MATERIAL	DIAMETER
INLET PIPE #1	*	*	*
INLET PIPE #2	*	*	*
OUTLET PIPE	*	*	*

RIM ELEVATION	*

ANTI-FLOTATION BALLAST	WIDTH	HEIGHT
	*	*

NOTES/SPECIAL REQUIREMENTS:

* PER ENGINEER OF RECORD

GENERAL NOTES

1. CONTECH TO PROVIDE ALL MATERIALS UNLESS NOTED OTHERWISE.
2. DIMENSIONS MARKED WITH ( ) ARE REFERENCE DIMENSIONS. ACTUAL DIMENSIONS MAY VARY.
3. FOR SITE SPECIFIC DRAWINGS WITH DETAILED VAULT DIMENSIONS AND WEIGHTS, PLEASE CONTACT YOUR CONTECH ENGINEERED SOLUTIONS LLC REPRESENTATIVE. www.ContechES.com
4. STORMFILTER WATER QUALITY STRUCTURE SHALL BE IN ACCORDANCE WITH ALL DESIGN DATA AND INFORMATION CONTAINED IN THIS DRAWING.
5. STRUCTURE SHALL MEET AASHTO HS-20 LOAD RATING, ASSUMING EARTH COVER OF 0' - 5' [1524 mm] AND GROUNDWATER ELEVATION AT, OR BELOW, THE OUTLET PIPE INVERT ELEVATION. ENGINEER OF RECORD TO CONFIRM ACTUAL GROUNDWATER ELEVATION. CASTINGS SHALL MEET AASHTO M306 AND BE CAST WITH THE CONTECH LOGO.
6. FILTER CARTRIDGES SHALL BE MEDIA-FILLED, PASSIVE, SIPHON ACTUATED, RADIAL FLOW, AND SELF CLEANING. RADIAL MEDIA DEPTH SHALL BE 7-INCHES [178 mm]. FILTER MEDIA CONTACT TIME SHALL BE AT LEAST 38 SECONDS.
7. SPECIFIC FLOW RATE IS EQUAL TO THE FILTER TREATMENT CAPACITY (gpm) [L/s] DIVIDED BY THE FILTER CONTACT SURFACE AREA (sq ft)[m^2].
8. STORMFILTER STRUCTURE SHALL BE PRECAST CONCRETE CONFORMING TO ASTM C-478 AND AASHTO LOAD FACTOR DESIGN METHOD.

INSTALLATION NOTES

A. ANY SUB-BASE, BACKFILL DEPTH, AND/OR ANTI-FLOTATION PROVISIONS ARE SITE-SPECIFIC DESIGN CONSIDERATIONS AND SHALL BE SPECIFIED BY ENGINEER OF RECORD.
B. CONTRACTOR TO PROVIDE EQUIPMENT WITH SUFFICIENT LIFTING AND REACH CAPACITY TO LIFT AND SET THE STORMFILTER STRUCTURE.
C. CONTRACTOR TO INSTALL JOINT SEALANT BETWEEN ALL STRUCTURE SECTIONS AND ASSEMBLE STRUCTURE.
D. CONTRACTOR TO PROVIDE, INSTALL, AND GROUT INLET PIPE(S).
E. CONTRACTOR TO PROVIDE AND INSTALL CONNECTOR TO THE OUTLET RISER STUB. STORMFILTER EQUIPPED WITH A DUAL DIAMETER HDPE OUTLET STUB AND SAND COLLAR. IF OUTLET PIPE IS LARGER THAN 8 INCHES [200 mm], CONTRACTOR TO REMOVE THE 8 INCH [200 mm] OUTLET STUB AT MOLDED-IN CUT LINE. COUPLING BY FERNCO OR EQUAL AND PROVIDED BY CONTRACTOR.
F. CONTRACTOR TO TAKE APPROPRIATE MEASURES TO PROTECT CARTRIDGES FROM CONSTRUCTION-RELATED EROSION RUNOFF.

CONTECH®
ENGINEERED SOLUTIONS LLC
www.contechES.com
9025 Centre Pointe Dr., Suite 400, West Chester, OH 45069
800-338-1122 513-645-7000 513-645-7993 FAX

SFMH48
STORMFILTER
STANDARD DETAIL

I:\COMMON\CAD\TREATMENT\10 STORMFILTER\40 STANDARD DRAWINGS\SF MH\DWG\METRIC - WIP\SFMH48M-DTL WITH GRATE.DWG 5/12/2017 4:18 PM

CONTECH®
ENGINEERED SOLUTIONS

StormFilter Inspection and Maintenance Procedures

The Stormwater Management StormFilter®

Maintenance Guidelines

The primary purpose of the Stormwater Management StormFilter® is to filter and prevent pollutants from entering our waterways. Like any effective filtration system, periodically these pollutants must be removed to restore the StormFilter to its full efficiency and effectiveness.

Maintenance requirements and frequency are dependent on the pollutant load characteristics of each site. Maintenance activities may be required in the event of a chemical spill or due to excessive sediment loading from site erosion or extreme storms. It is a good practice to inspect the system after major storm events.

Maintenance Procedures

Although there are many effective maintenance options, we believe the following procedure to be efficient, using common equipment and existing maintenance protocols. The following two-step procedure is recommended::

1. **Inspection**
   - Inspection of the vault interior to determine the need for maintenance.
2. **Maintenance**
   - Cartridge replacement
   - Sediment removal

Inspection and Maintenance Timing

At least one scheduled inspection should take place per year with maintenance following as warranted.

First, an inspection should be done before the winter season. During the inspection the need for maintenance should be determined and, if disposal during maintenance will be required, samples of the accumulated sediments and media should be obtained.

Second, if warranted, a maintenance (replacement of the filter cartridges and removal of accumulated sediments) should be performed during periods of dry weather.

In addition to these two activities, it is important to check the condition of the StormFilter unit after major storms for potential damage caused by high flows and for high sediment accumulation that may be caused by localized erosion in the drainage area. It may be necessary to adjust the inspection/ maintenance schedule depending on the actual operating conditions encountered by the system. In general, inspection activities can be conducted at any time, and maintenance should occur, if warranted, during dryer months in late summer to early fall.

Maintenance Frequency

The primary factor for determining frequency of maintenance for the StormFilter is sediment loading.

A properly functioning system will remove solids from water by trapping particulates in the porous structure of the filter media inside the cartridges. The flow through the system will naturally decrease as more and more particulates are trapped. Eventually the flow through the cartridges will be low enough to require replacement. It may be possible to extend the usable span of the cartridges by removing sediment from upstream trapping devices on a routine as-needed basis, in order to prevent material from being re-suspended and discharged to the StormFilter treatment system.

The average maintenance lifecycle is approximately 1-5 years. Site conditions greatly influence maintenance requirements. StormFilter units located in areas with erosion or active construction may need to be inspected and maintained more often than those with fully stabilized surface conditions.

Regulatory requirements or a chemical spill can shift maintenance timing as well. The maintenance frequency may be adjusted as additional monitoring information becomes available during the inspection program. Areas that develop known problems should be inspected more frequently than areas that demonstrate no problems, particularly after major storms. Ultimately, inspection and maintenance activities should be scheduled based on the historic records and characteristics of an individual StormFilter system or site. It is recommended that the site owner develop a database to properly manage StormFilter inspection and maintenance programs..

Inspection Procedures

The primary goal of an inspection is to assess the condition of the cartridges relative to the level of visual sediment loading as it relates to decreased treatment capacity. It may be desirable to conduct this inspection during a storm to observe the relative flow through the filter cartridges. If the submerged cartridges are severely plugged, then typically large amounts of sediments will be present and very little flow will be discharged from the drainage pipes. If this is the case, then maintenance is warranted and the cartridges need to be replaced.

Warning: In the case of a spill, the worker should abort inspection activities until the proper guidance is obtained. Notify the local hazard control agency and Contech Engineered Solutions immediately.

To conduct an inspection:

Important: Inspection should be performed by a person who is familiar with the operation and configuration of the StormFilter treatment unit.

1. If applicable, set up safety equipment to protect and notify surrounding vehicle and pedestrian traffic.
2. Visually inspect the external condition of the unit and take notes concerning defects/problems.
3. Open the access portals to the vault and allow the system vent.
4. Without entering the vault, visually inspect the inside of the unit, and note accumulations of liquids and solids.
5. Be sure to record the level of sediment build-up on the floor of the vault, in the forebay, and on top of the cartridges. If flow is occurring, note the flow of water per drainage pipe. Record all observations. Digital pictures are valuable for historical documentation.
6. Close and fasten the access portals.
7. Remove safety equipment.
8. If appropriate, make notes about the local drainage area relative to ongoing construction, erosion problems, or high loading of other materials to the system.
9. Discuss conditions that suggest maintenance and make decision as to whether or not maintenance is needed.

Maintenance Decision Tree

The need for maintenance is typically based on results of the inspection. The following Maintenance Decision Tree should be used as a general guide. (Other factors, such as Regulatory Requirements, may need to be considered)

1. Sediment loading on the vault floor.
   a. If >4" of accumulated sediment, maintenance is required.
2. Sediment loading on top of the cartridge.
   a. If >1/4" of accumulation, maintenance is required.
3. Submerged cartridges.
   a. If >4" of static water above cartridge bottom for more than 24 hours after end of rain event, maintenance is required. (Catch basins have standing water in the cartridge bay.)
4. Plugged media.
   a. If pore space between media granules is absent, maintenance is required.
5. Bypass condition.
   a. If inspection is conducted during an average rain fall event and StormFilter remains in bypass condition (water over the internal outlet baffle wall or submerged cartridges), maintenance is required.
6. Hazardous material release.
   a. If hazardous material release (automotive fluids or other) is reported, maintenance is required.
7. Pronounced scum line.
   a. If pronounced scum line (say ≥ 1/4" thick) is present above top cap, maintenance is required.

Maintenance

Depending on the configuration of the particular system, maintenance personnel will be required to enter the vault to perform the maintenance.

> **Important**: If vault entry is required, OSHA rules for confined space entry must be followed.

Filter cartridge replacement should occur during dry weather. It may be necessary to plug the filter inlet pipe if base flows is occurring.

Replacement cartridges can be delivered to the site or customers facility. Information concerning how to obtain the replacement cartridges is available from Contech Engineered Solutions.

> **Warning**: In the case of a spill, the maintenance personnel should abort maintenance activities until the proper guidance is obtained. Notify the local hazard control agency and Contech Engineered Solutions immediately.

To conduct cartridge replacement and sediment removal maintenance:

1. If applicable, set up safety equipment to protect maintenance personnel and pedestrians from site hazards.
2. Visually inspect the external condition of the unit and take notes concerning defects/problems.
3. Open the doors (access portals) to the vault and allow the system to vent.
4. Without entering the vault, give the inside of the unit, including components, a general condition inspection.
5. Make notes about the external and internal condition of the vault. Give particular attention to recording the level of sediment build-up on the floor of the vault, in the forebay, and on top of the internal components.
6. Using appropriate equipment offload the replacement cartridges (up to 150 lbs. each) and set aside.
7. Remove used cartridges from the vault using one of the following methods:

Method 1:

A. This activity will require that maintenance personnel enter the vault to remove the cartridges from the under drain manifold and place them under the vault opening for lifting (removal). Disconnect each filter cartridge from the underdrain connector by rotating counterclockwise 1/4 of a turn. Roll the loose cartridge, on edge, to a convenient spot beneath the vault access.

   Using appropriate hoisting equipment, attach a cable from the boom, crane, or tripod to the loose cartridge. Contact Contech Engineered Solutions for suggested attachment devices.

B. Remove the used cartridges (up to 250 lbs. each) from the vault.

> **Important:** Care must be used to avoid damaging the cartridges during removal and installation. The cost of repairing components damaged during maintenance will be the responsibility of the owner.

C. Set the used cartridge aside or load onto the hauling truck.

D. Continue steps a through c until all cartridges have been removed.

Method 2:

A. This activity will require that maintenance personnel enter the vault to remove the cartridges from the under drain manifold and place them under the vault opening for lifting (removal). Disconnect each filter cartridge from the underdrain connector by rotating counterclockwise 1/4 of a turn. Roll the loose cartridge, on edge, to a convenient spot beneath the vault access.

B. Unscrew the cartridge cap.

C. Remove the cartridge hood and float.

D. At location under structure access, tip the cartridge on its side.

E. Empty the cartridge onto the vault floor. Reassemble the empty cartridge.

F. Set the empty, used cartridge aside or load onto the hauling truck.

G. Continue steps a through e until all cartridges have been removed.

8. Remove accumulated sediment from the floor of the vault and from the forebay. This can most effectively be accomplished by use of a vacuum truck.
9. Once the sediments are removed, assess the condition of the vault and the condition of the connectors.
10. Using the vacuum truck boom, crane, or tripod, lower and install the new cartridges. Once again, take care not to damage connections.
11. Close and fasten the door.
12. Remove safety equipment.
13. Finally, dispose of the accumulated materials in accordance with applicable regulations. Make arrangements to return the used **empty** cartridges to Contech Engineered Solutions.

Related Maintenance Activities - Performed on an as-needed basis

StormFilter units are often just one of many structures in a more comprehensive stormwater drainage and treatment system.

In order for maintenance of the StormFilter to be successful, it is imperative that all other components be properly maintained. The maintenance/repair of upstream facilities should be carried out prior to StormFilter maintenance activities.

In addition to considering upstream facilities, it is also important to correct any problems identified in the drainage area. Drainage area concerns may include: erosion problems, heavy oil loading, and discharges of inappropriate materials.

Material Disposal

The accumulated sediment found in stormwater treatment and conveyance systems must be handled and disposed of in accordance with regulatory protocols. It is possible for sediments to contain measurable concentrations of heavy metals and organic chemicals (such as pesticides and petroleum products). Areas with the greatest potential for high pollutant loading include industrial areas and heavily traveled roads.

Sediments and water must be disposed of in accordance with all applicable waste disposal regulations. When scheduling maintenance, consideration must be made for the disposal of solid and liquid wastes. This typically requires coordination with a local landfill for solid waste disposal. For liquid waste disposal a number of options are available including a municipal vacuum truck decant facility, local waste water treatment plant or on-site treatment and discharge.

Inspection Report

Date: Personnel:

Location: _____ System Size: _____

System Type: Vault ☐ Cast-In-Place ☐ Linear Catch Basin ☐ Manhole ☐ Other ☐

Sediment Thickness in Forebay: _____ Date: _____

Sediment Depth on Vault Floor: _____

Structural Damage: _____

Estimated Flow from Drainage Pipes (if available): _____

Cartridges Submerged: Yes ☐ No ☐ Depth of Standing Water: _____

StormFilter Maintenance Activities (check off if done and give description)

☐ Trash and Debris Removal: _____

☐ Minor Structural Repairs: _____

☐ Drainage Area Report _____

Excessive Oil Loading: Yes ☐ No ☐ Source: _____

Sediment Accumulation on Pavement: Yes ☐ No ☐ Source: _____

Erosion of Landscaped Areas: Yes ☐ No ☐ Source: _____

Items Needing Further Work: _____

Owners should contact the local public works department and inquire about how the department disposes of their street waste residuals.

Other Comments:

_____

_____

_____

_____

_____

_____

_____

_____

Review the condition reports from the previous inspection visits.

StormFilter Maintenance Report

Date: _____ Personnel: _____

Location: _____ System Size: _____

System Type: Vault ☐ Cast-In-Place ☐ Linear Catch Basin ☐ Manhole ☐ Other ☐

List Safety Procedures and Equipment Used: _____

_____

_____

System Observations

Months in Service:

Oil in Forebay (if present): Yes ☐ No ☐

Sediment Depth in Forebay (if present): _____

Sediment Depth on Vault Floor: _____

Structural Damage: _____

Drainage Area Report

Excessive Oil Loading: Yes ☐ No ☐ Source: _____

Sediment Accumulation on Pavement: Yes ☐ No ☐ Source: _____

Erosion of Landscaped Areas: Yes ☐ No ☐ Source: _____

StormFilter Cartridge Replacement Maintenance Activities

Remove Trash and Debris: Yes ☐ No ☐ Details: _____

Replace Cartridges: Yes ☐ No ☐ Details: _____

Sediment Removed: Yes ☐ No ☐ Details: _____

Quantity of Sediment Removed (estimate?):

Minor Structural Repairs: Yes ☐ No ☐ Details: _____

Residuals (debris, sediment) Disposal Methods: _____

Notes:

_____

_____

_____

_____

_____

_____

_____

RECYCLED PAPER

CONTECH®
ENGINEERED SOLUTIONS

© 2018 CONTECH ENGINEERED SOLUTIONS LLC, A QUIKRETE COMPANY

800-338-1122
www.ContechES.com

All Rights Reserved. Printed in the USA.

Contech Engineered Solutions LLC provides site solutions for the civil engineering industry. Contech's portfolio includes bridges, drainage, sanitary sewer, stormwater and earth stabilization products. For information on other Contech division offerings, visit www.ContechES.com or call 800.338.1122.

Support

- Drawings and specifications are available at www.conteches.com.
- Site-specific design support is available from our engineers.

NOTHING IN THIS CATALOG SHOULD BE CONSTRUED AS A WARRANTY. APPLICATIONS SUGGESTED HEREIN ARE DESCRIBED ONLY TO HELP READERS MAKE THEIR OWN EVALUATIONS AND DECISIONS, AND ARE NEITHER GUARANTEES NOR WARRANTIES OF SUITABILITY FOR ANY APPLICATION. CONTECH MAKES NO WARRANTY WHATSOEVER, EXPRESS OR IMPLIED, RELATED TO THE APPLICATIONS, MATERIALS, COATINGS, OR PRODUCTS DISCUSSED HEREIN. ALL IMPLIED WARRANTIES OF MERCHANTABILITY AND ALL IMPLIED WARRANTIES OF FITNESS FOR ANY PARTICULAR PURPOSE ARE DISCLAIMED BY CONTECH. SEE CONTECH'S CONDITIONS OF SALE (AVAILABLE AT WWW.CONTECHES.COM/COS) FOR MORE INFORMATION.